vantara™

Specifications

ROBE HOOK

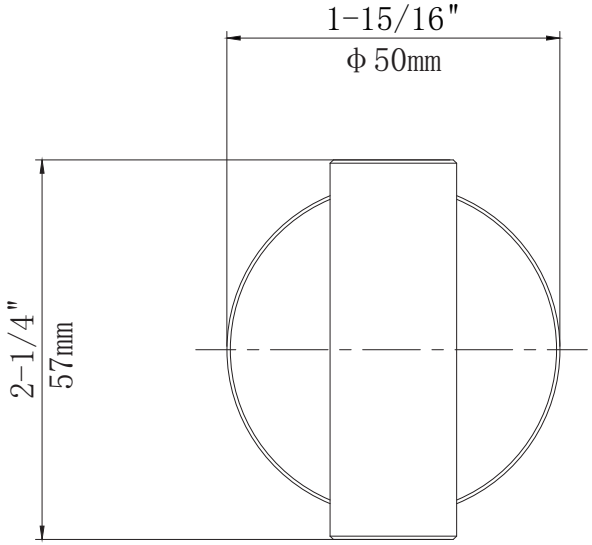

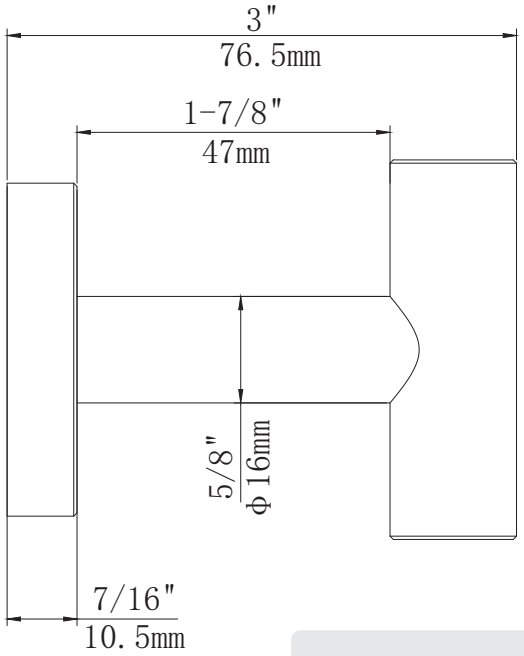

ATTENTION: Dimensions may vary by up to 3/8". For proper fit and installation, verify all measurements on the actual unit before proceeding.