vantara™

Specifications

BATHROOM FAUCET SQUARE

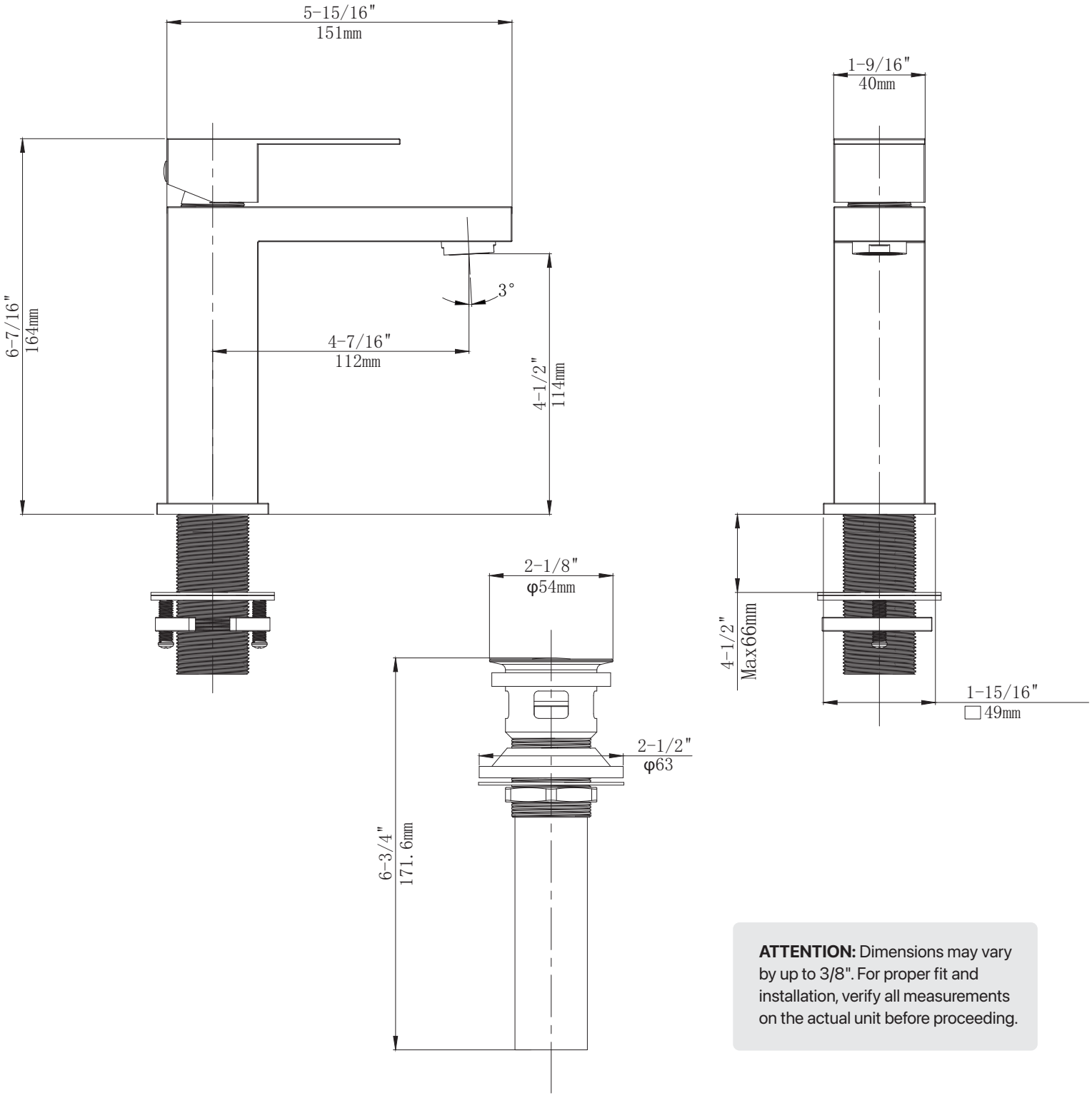

ATTENTION: Dimensions may vary by up to 3/8". For proper fit and installation, verify all measurements on the actual unit before proceeding.